NOTES:

1. Products and installations depicted satisfy the requirements of the Florida Building Code, Building 7th Edition (2020) for design wind pressures and overall sizes noted.

2. Geometric shapes are also approved. Approved geometric shape dimensions shall not exceed inscribed dimensions of approved rectangular assembly shown on Sheet 2.

3. Wood bucks, wood framing, steel stud framing, concrete and concrete masonry are by others and shall be designed by the architect or engineer of record to resist the loads imparted to them.

4. Wood buck strips and wood frames are assumed S–P–F (G=0.42) or denser. Buck width shall be greater than the frame width. Tapered or partial width buck strips are not allowed.

5. Concrete masonry installations are assumed at least ASTM C90 normal weight hollow masonry units with a 1–1/4" wall thickness or normal weight concrete with a minimum compressive strength of f'c = 3,000 psi.

6. Metal stud frames are assumed to be a minimum 18 gauge 33 KSI steel.

7. Wood screws shall be corrosion resistant and meet the requirements of ANSI/ASME B18.6.1

8. Tapcon masonry anchors shall have a minimum embedment of 1–1/2" or full penetration of concrete masonry unit shell. They shall also have a minimum of 2" edge distance. Install concrete masonry anchors per manufacturer's installation instructions.

9. TEKS screws shall be corrosion resistant and shall be ASTM A510 Grade 1018 or equivalent.

10. Maximum permitted shim thickness is 1/4". Shims shall be non–compressible and load bearing type. Every through–frame fastener shall have a shim.

11. Products are not impact resistant and require approved protection devices if used in wind–borne debris regions.

12. Approved for use in High Velocity Hurricane Zone (HVHZ).

CONTENTS:

Sheet	1	Notes
Sheet	2	Elevations
Sheet	3	Fin Installations
Sheets	4–7	Finless and Flange Installations

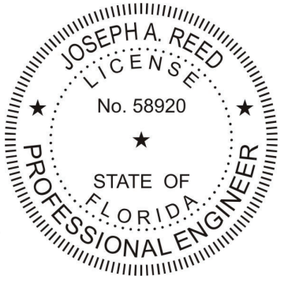

Joseph A. Reed, PE
FL PE 58920
FL REG 33474
5 Leigh Dr.
York, PA 17406
717-846-1200

2020.09.15 14:55:13 -04'00'

185MD Fixed Window - non Impact
Notes

MI Windows and Doors
702 W. Market St.
Gratz, PA 17030

Drawing No.: 23304-1-1003A
Project No.: 23304-1
Drawn By: JAR Rev: Date: 09/15/20

Scale: NTS

185MD FIXED WINDOW (NON-IMPACT)
MAXIMUM SIZE: 52" X 76"
DESIGN PRESSURE: +60/-69.7 PSF

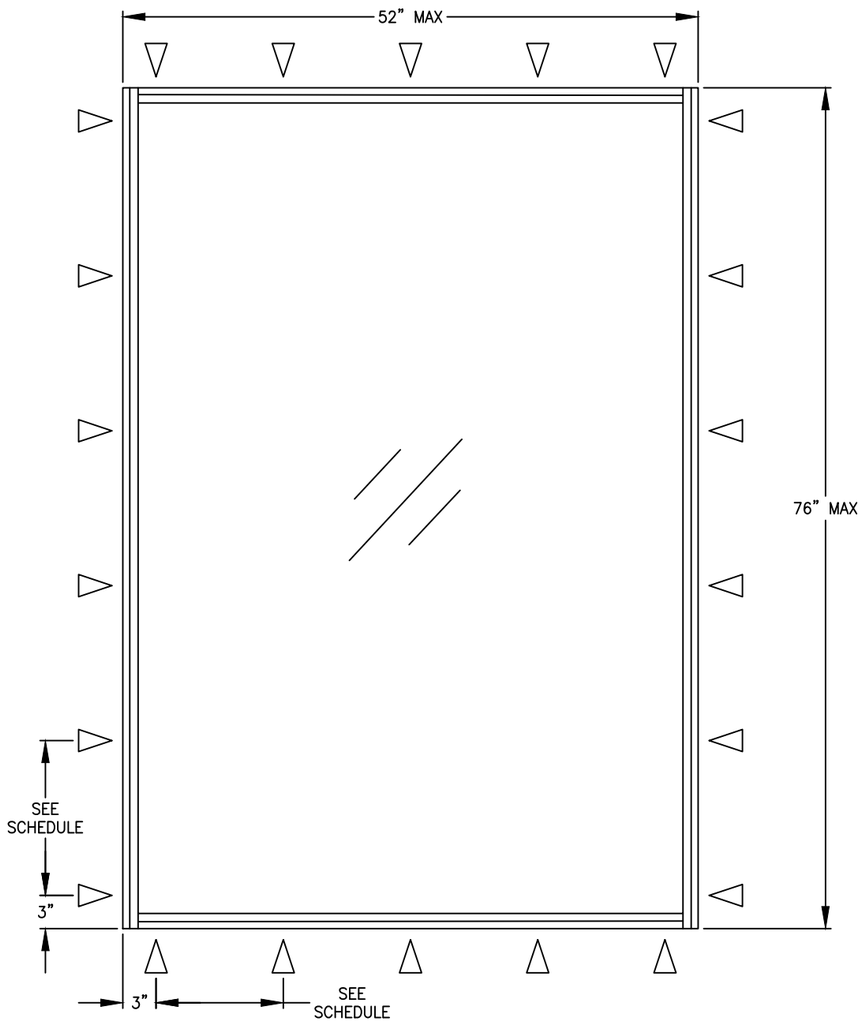

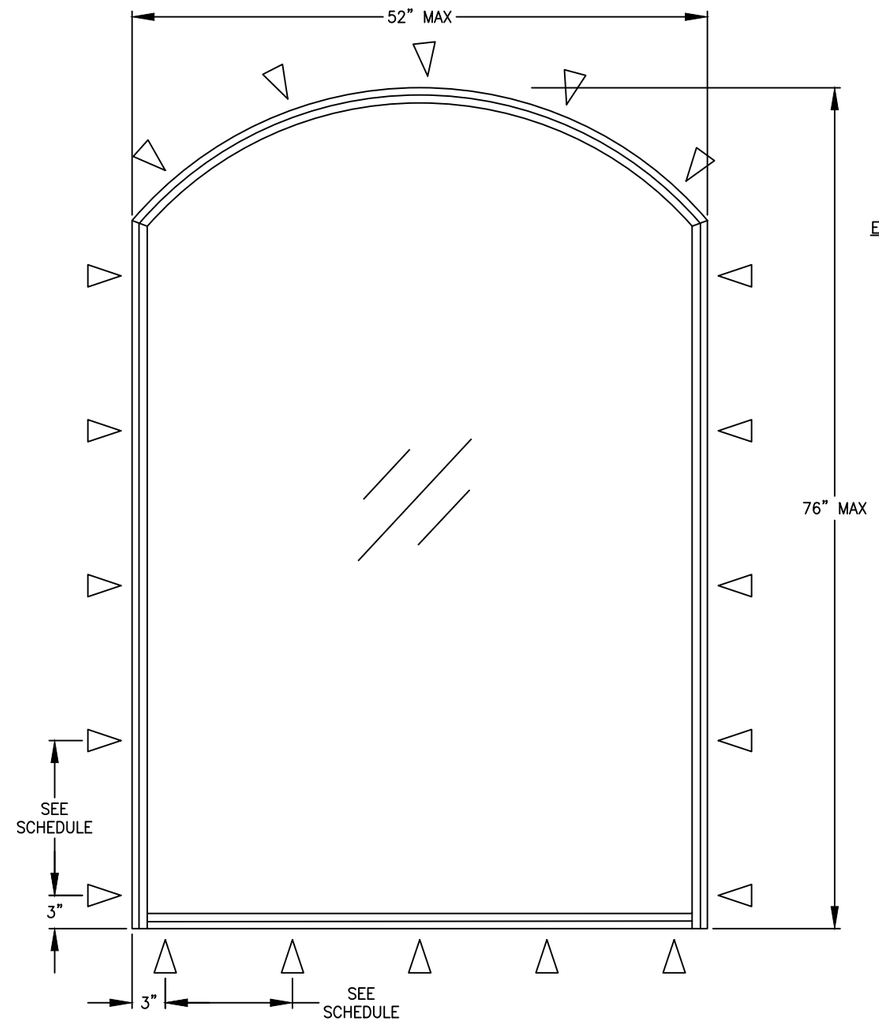

IG GLAZING

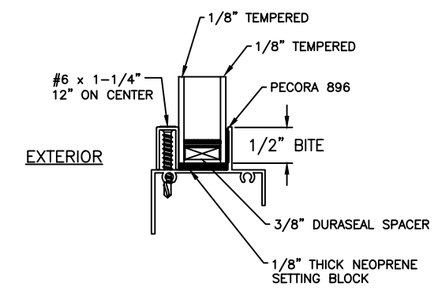

MAXIMUM DLO: 49-3/8" WIDE BY 73-1/8" TALL

△ ANCHOR
(SEE SHEETS 3 TO 7)

ANCHOR SCHEDULE		
FRAME TYPE	ANCHOR SPACING AT HEAD/SILL	ANCHOR SPACING AT JAMBS
FINLESS	15"	14"
FLANGE	15"	14"
FIN	9"	9"

JOSEPH A. REED
LICENSE
No. 58920
STATE OF FLORIDA
PROFESSIONAL ENGINEER

Joseph A. Reed, PE
FL PE 58920
FL REG 33474
5 Leigh Dr.
York, PA 17406
717-846-1200

Joseph A. Reed
2020.09.15 14:55:13 -04'00'

185MD Fixed Window - non Impact
Elevations

MI Windows and Doors
702 W. Market St.
Gratz, PA 17030

Drawing No.: 23304-1-1003A
Project No.: 23304-1
Drawn By: JAR Rev: Date: 09/15/20

Scale: NTS

HEAD

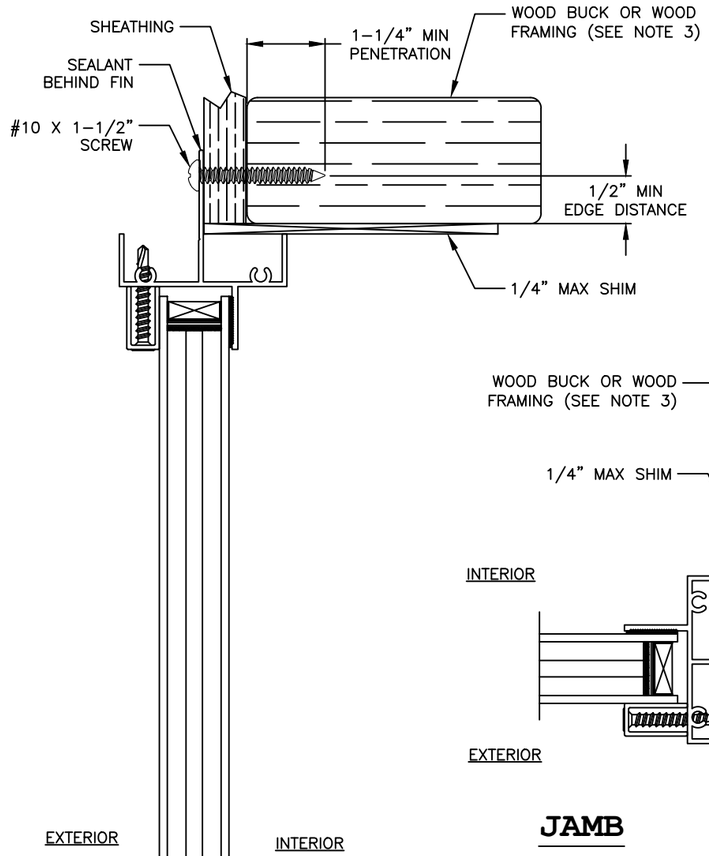

JAMB

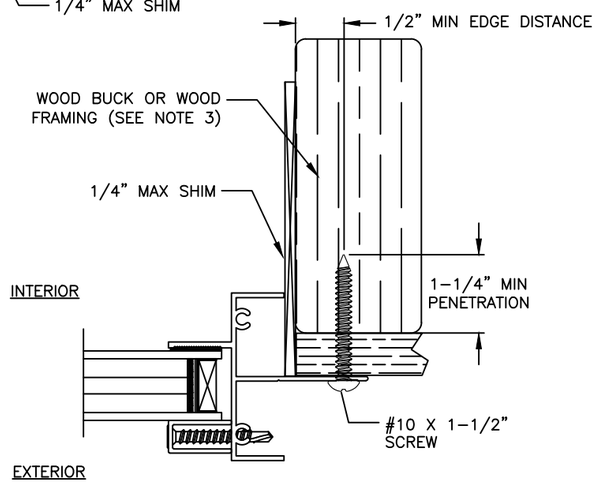

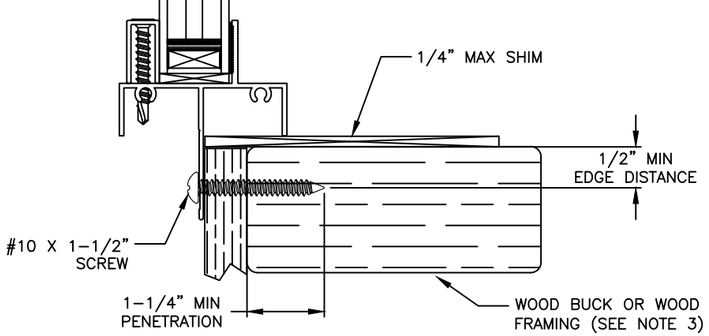

SILL

HEAD

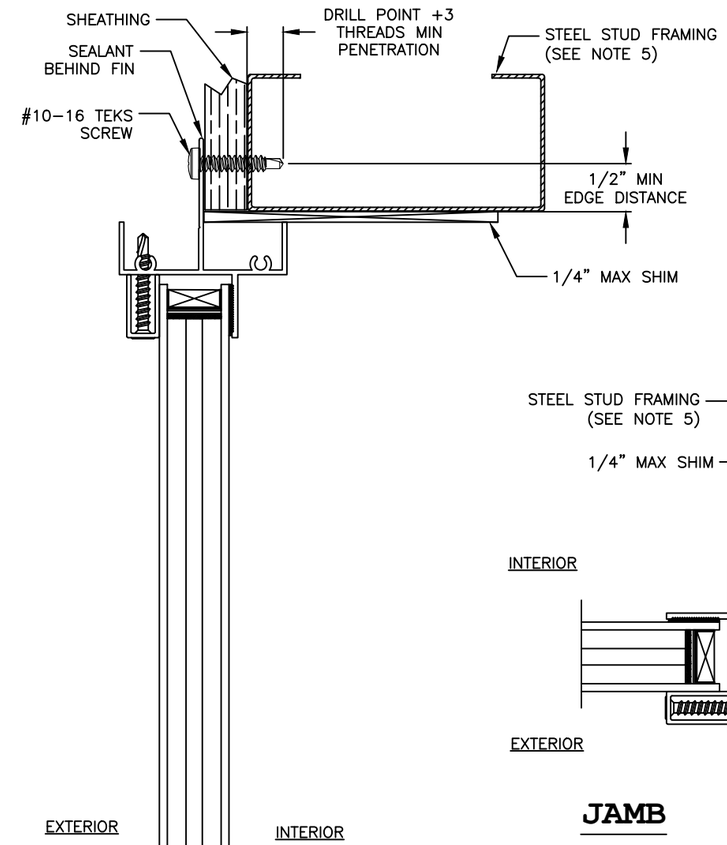

JAMB

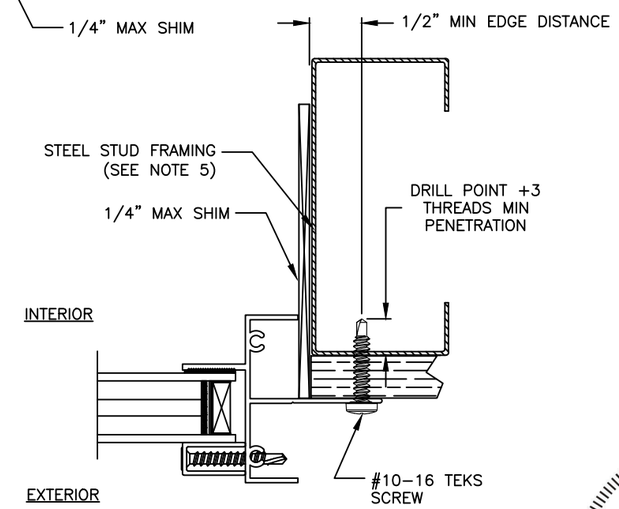

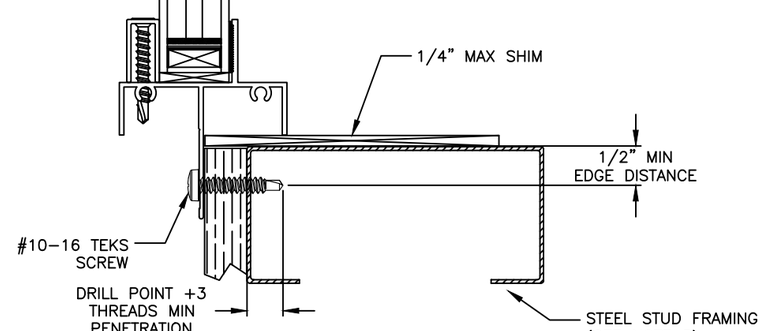

SILL

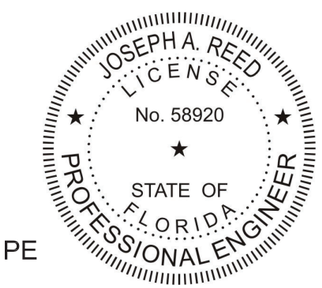

Joseph A. Reed, PE
FL PE 58920
FL REG 33474
5 Leigh Dr.
York, PA 17406
717-846-1200

Joseph A. Reed
2020.09.15 14:55:13 -04'00'

185MD Fixed Window - non Impact
Fin Installations

MI Windows and Doors
702 W. Market St.
Gratz, PA 17030

Drawing No.: 23304-1-1003A
Project No.: 23304-1
Drawn By: JAR Rev: Date: 09/15/20

Scale: NTS | Sheet 3 of 7

HEAD

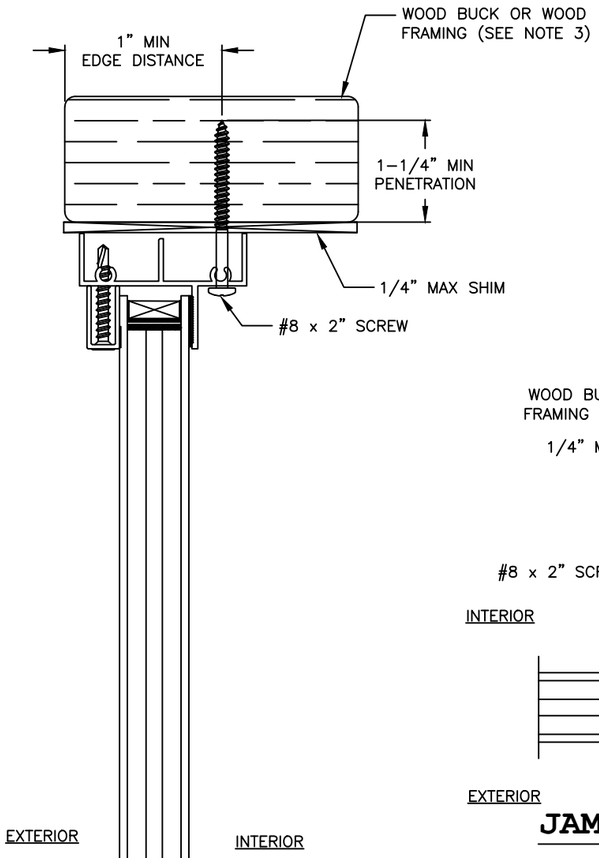

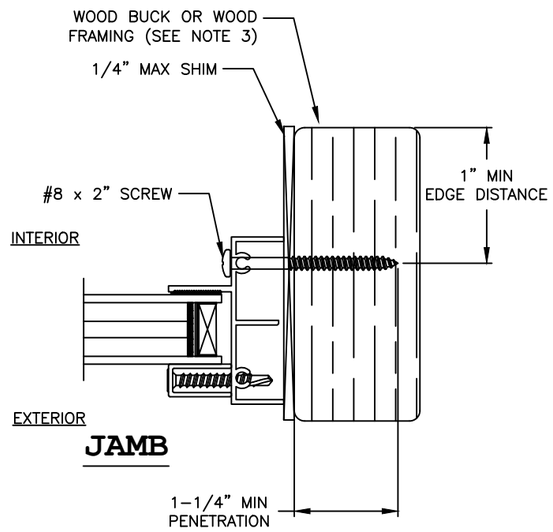

JAMB

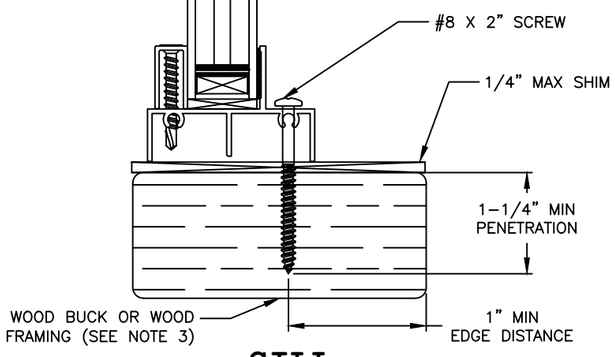

SILL

HEAD

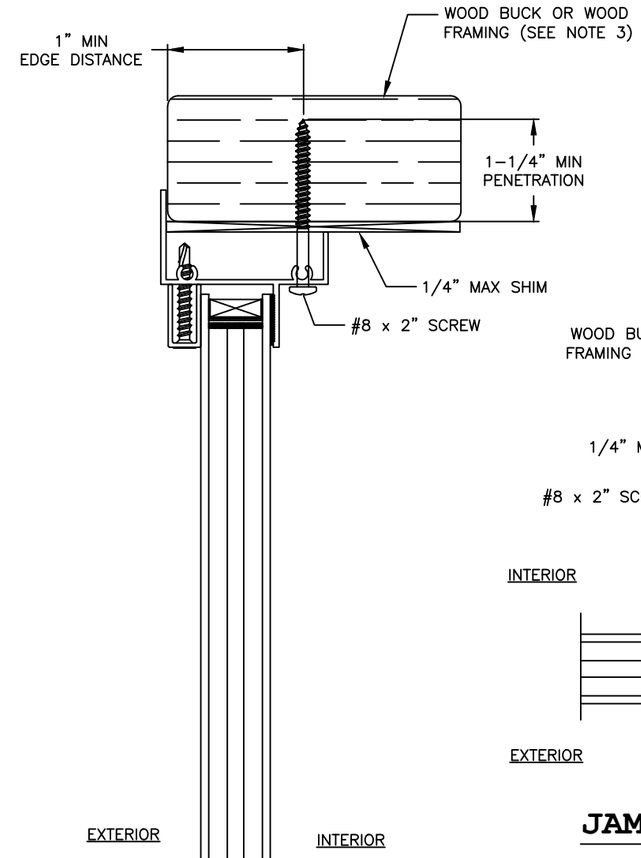

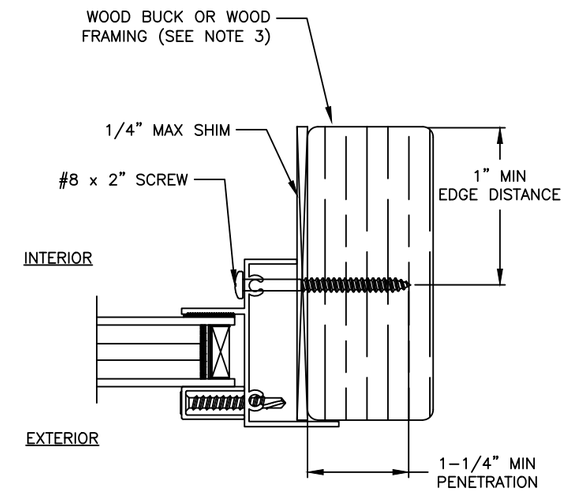

JAMB

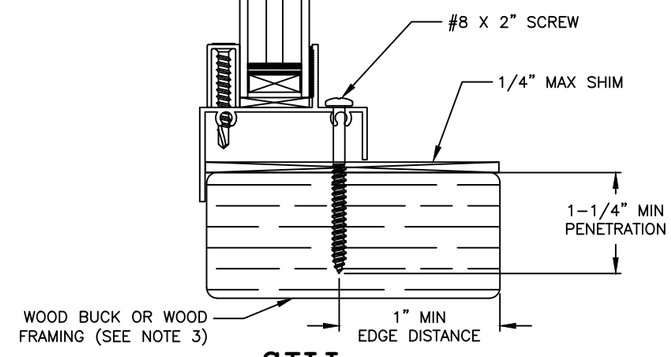

SILL

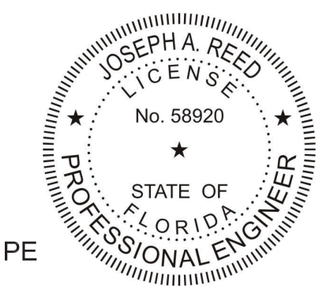

Joseph A. Reed, PE
FL PE 58920
FL REG 33474
5 Leigh Dr.
York, PA 17406
717-846-1200

2020.09.15 14:55:13 -04'00'

185MD Fixed Window - non Impact
Finless and Flange Installations
Wood

MI Windows and Doors
702 W. Market St.
Gratz, PA 17030

Drawing No.: 23304-1-1003A
Project No.: 23304-1
Drawn By: JAR Rev: Date: 09/15/20

Scale: NTS

HEAD

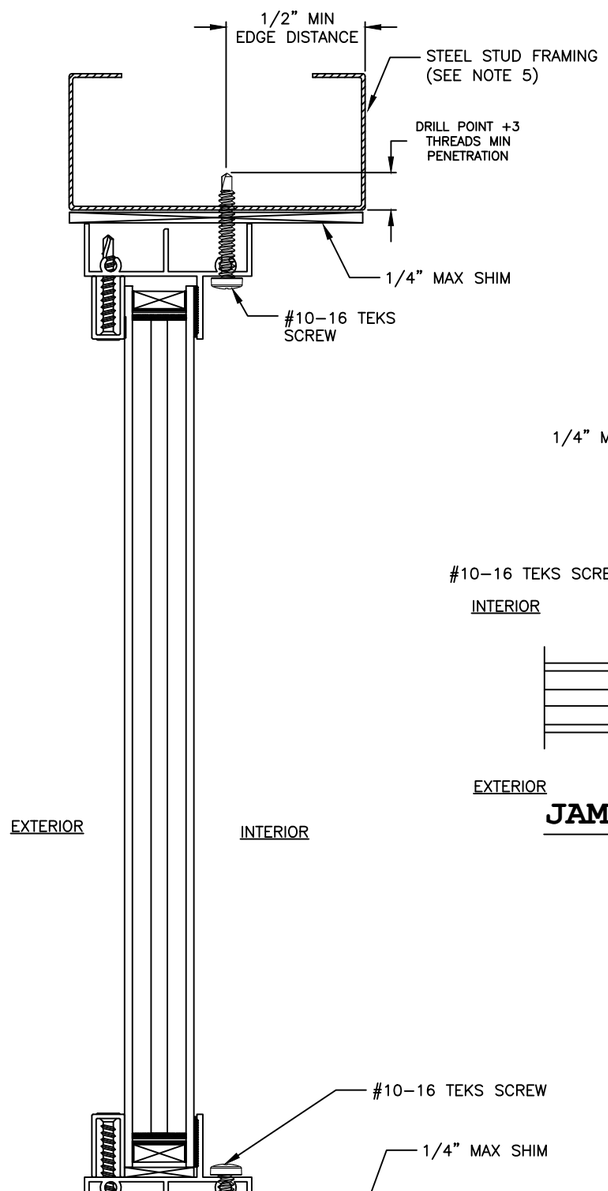

JAMB

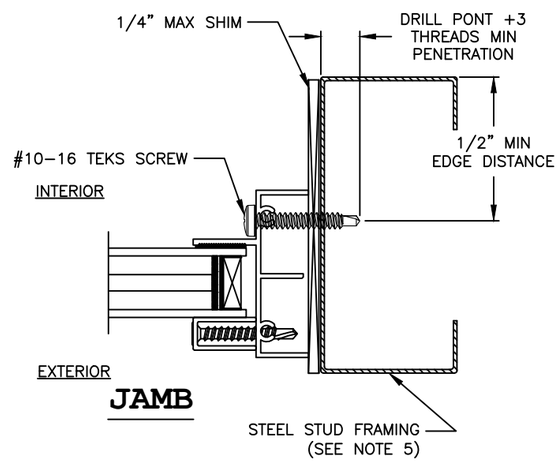

SILL

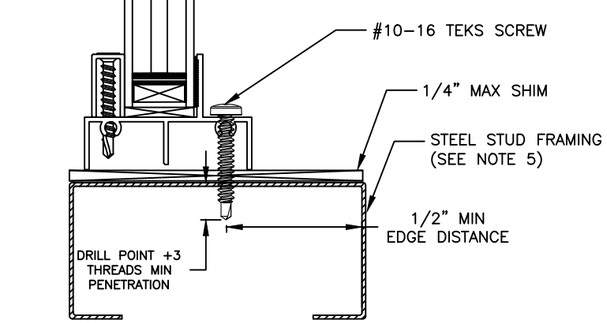

HEAD

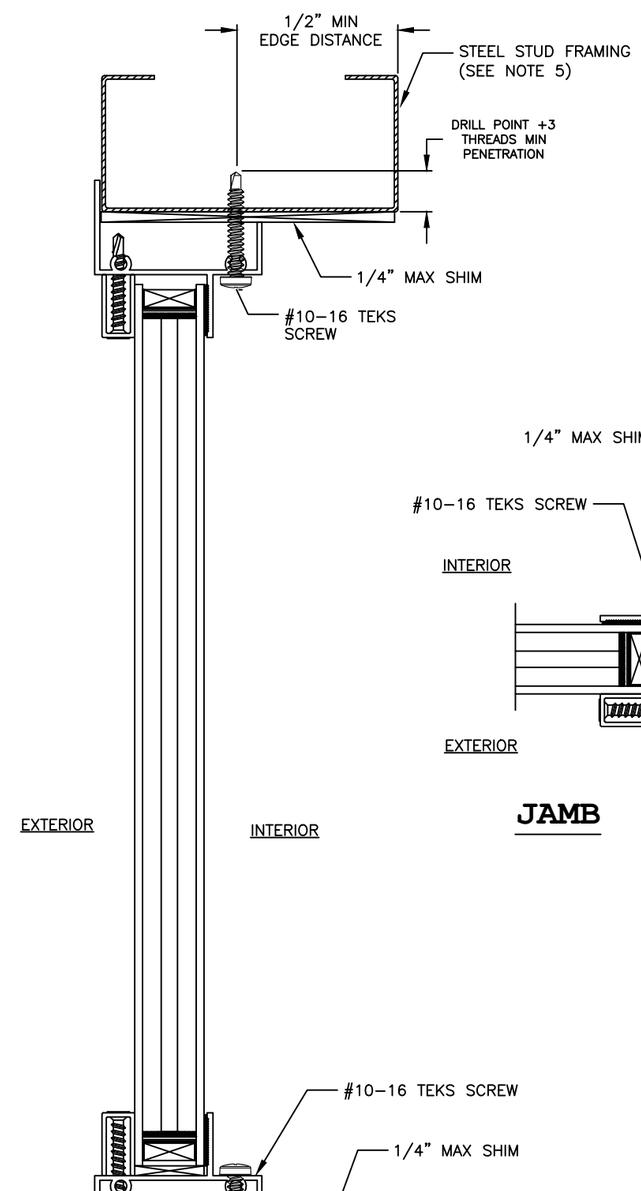

JAMB

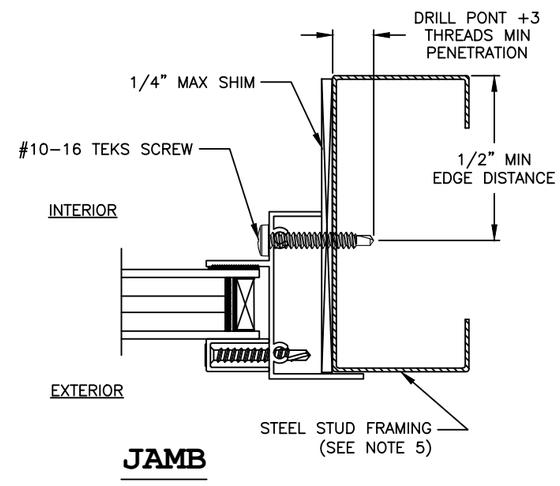

SILL

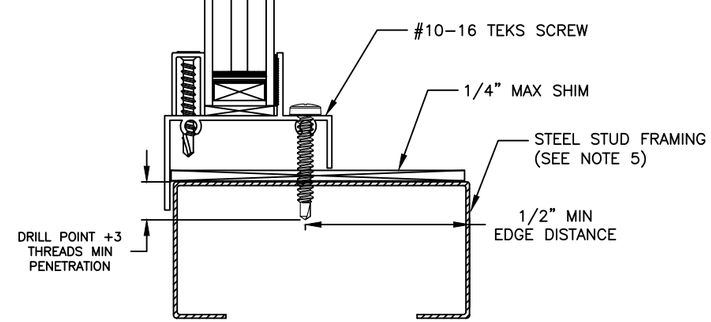

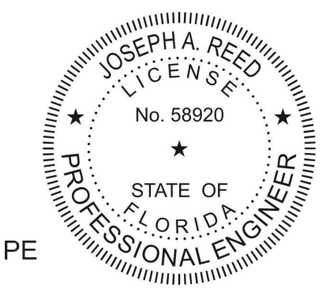

Joseph A. Reed, PE
FL PE 58920
FL REG 33474
5 Leigh Dr.
York, PA 17406
717-846-1200

2020.09.15 14:55:13 -04'00'

185MD Fixed Window - non Impact
Finless and Flange Installations
Steel Stud

MI Windows and Doors
702 W. Market St.
Gratz, PA 17030

Drawing No.: 23304-1-1003A
Project No.: 23304-1
Drawn By: JAR Rev: Date: 09/15/20

Scale: NTS | Sheet 5 of 7

HEAD

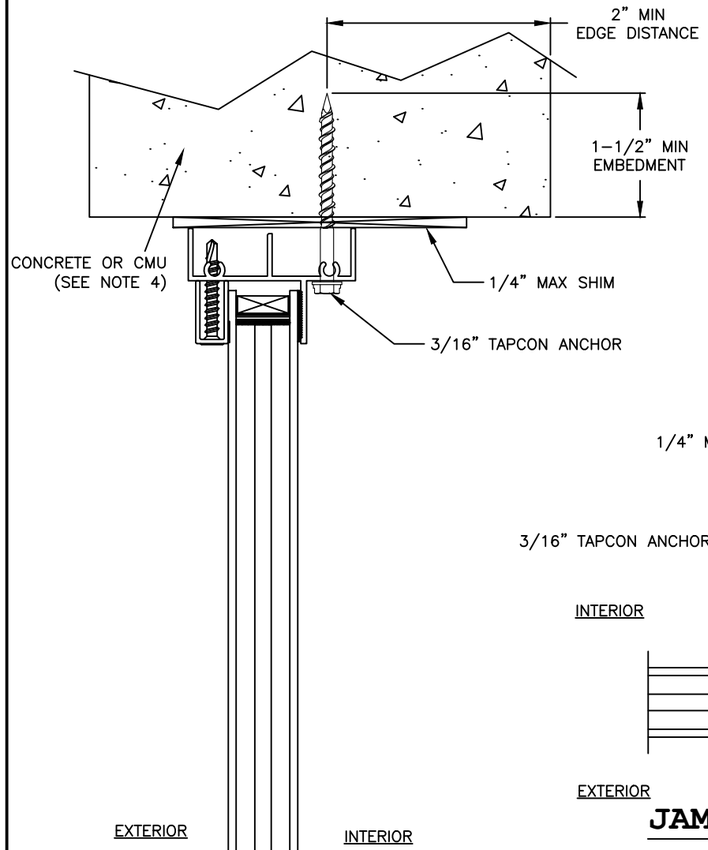

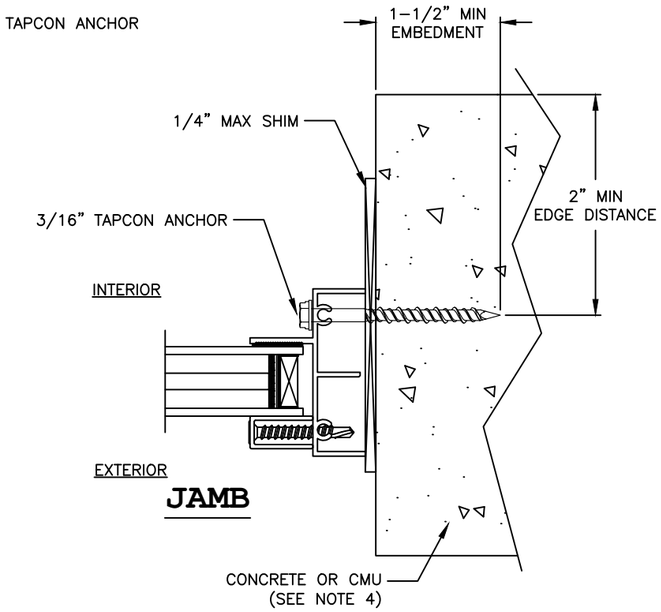

JAMB

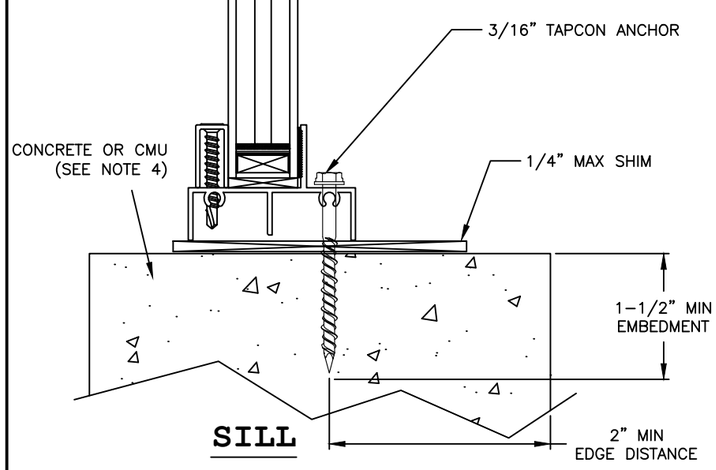

SILL

HEAD

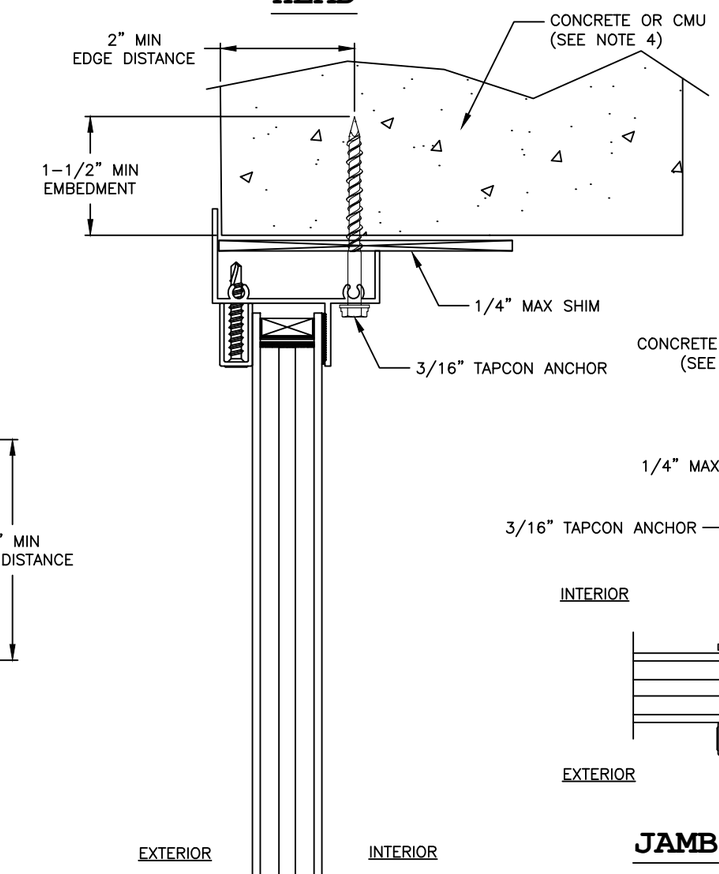

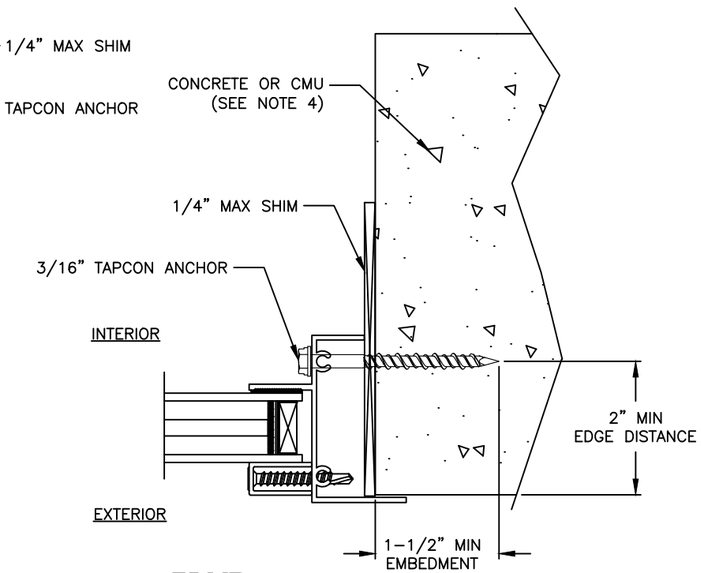

JAMB

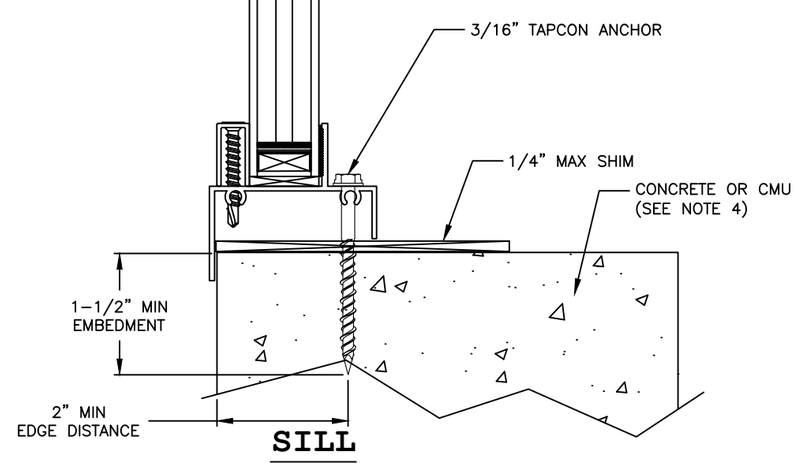

SILL

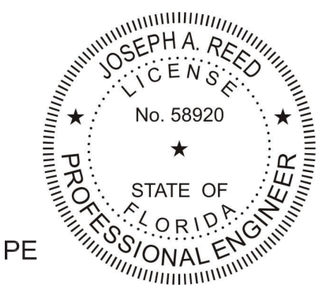

Joseph A. Reed, PE
FL PE 58920
FL REG 33474
5 Leigh Dr.
York, PA 17406
717-846-1200

2020.09.15 14:55:13 -04'00'

185MD Fixed Window - non Impact
Finless and Flange Installations
Concrete or CMU

MI Windows and Doors
702 W. Market St.
Gratz, PA 17030

Drawing No.: 23304-1-1003A
Project No.: 23304-1
Drawn By: JAR Rev: Date: 09/15/20

Scale: NTS | Sheet 6 of 7

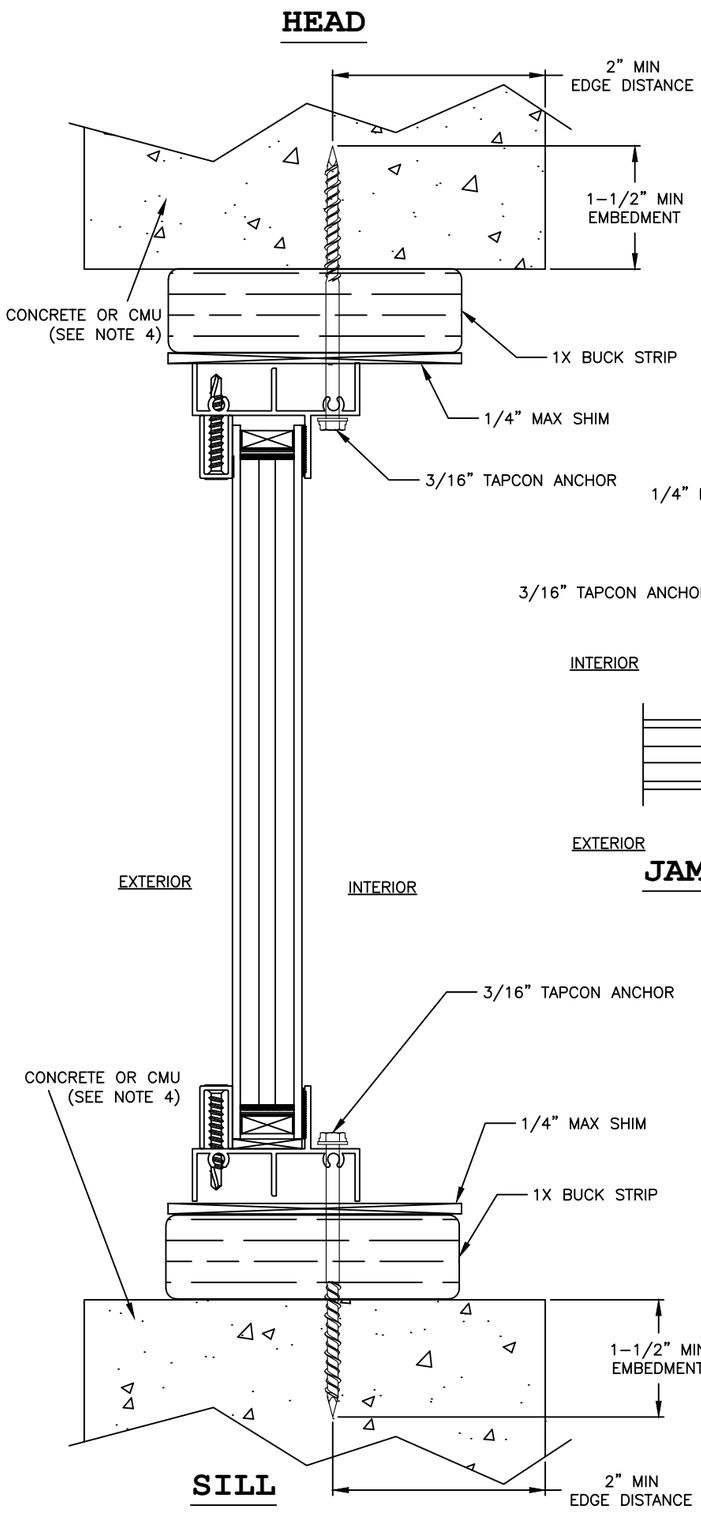

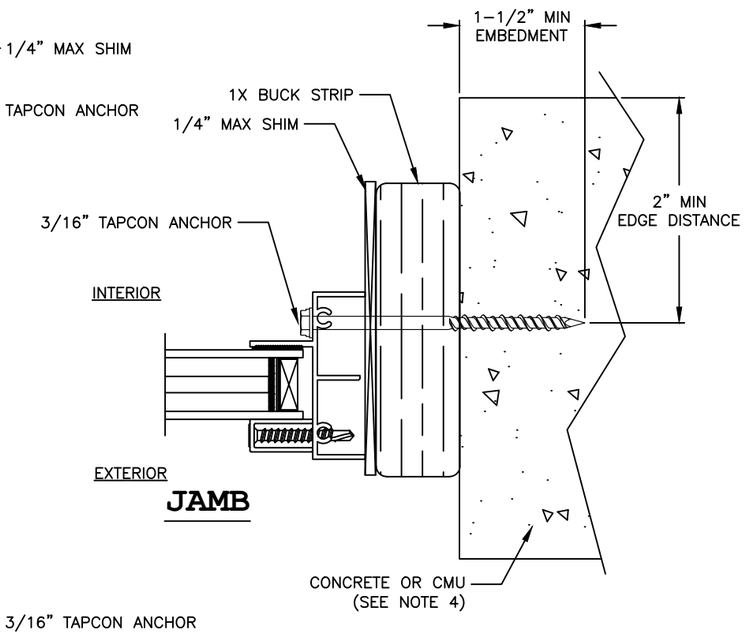

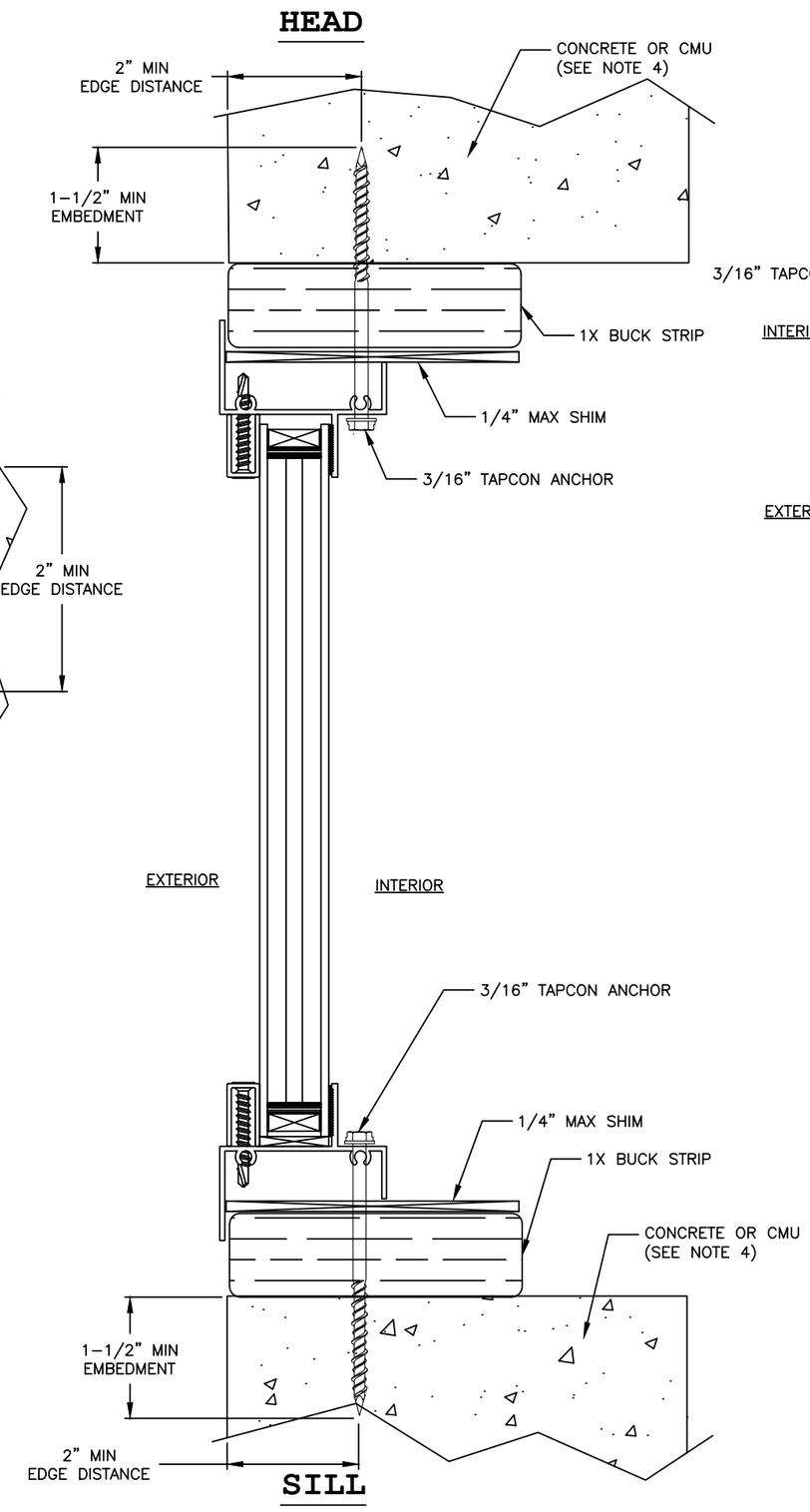

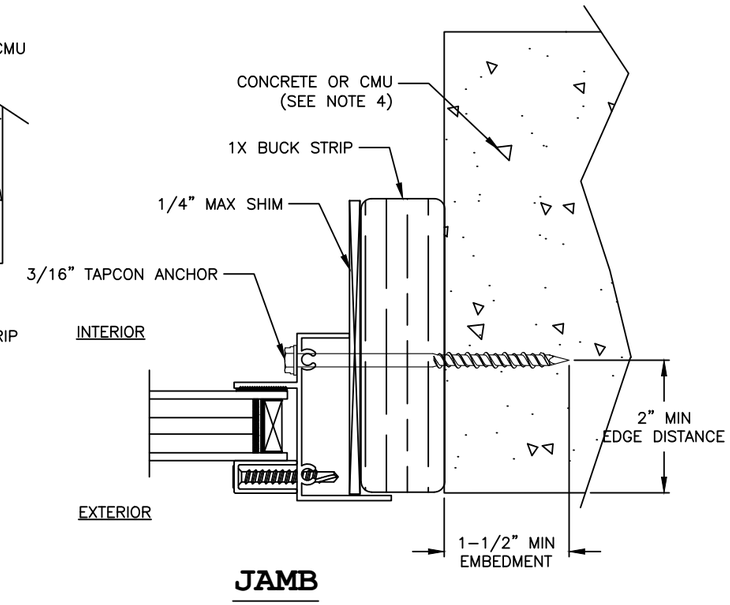

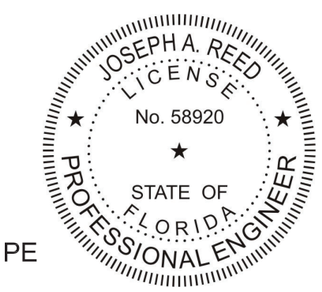

Joseph A. Reed, PE
FL PE 58920
FL REG 33474
5 Leigh Dr.
York, PA 17406
717-846-1200

2020.09.15 14:55:13 -04'00'

185MD Fixed Window - non Impact
Finless and Flange Installations
Concrete or CMU with Buck Strip

MI Windows and Doors
702 W. Market St.
Gratz, PA 17030

Drawing No.: 23304-1-1003A
Project No.: 23304-1
Drawn By: JAR Rev: Date: 09/15/20

Scale: NTS